REVISIONS			
ZONE	REV.	DESCRIPTION	DATE

H3MBBXRXX-
Hydra 2 Mountain Front Hub
28h 20x110 Boost 6 Bolt

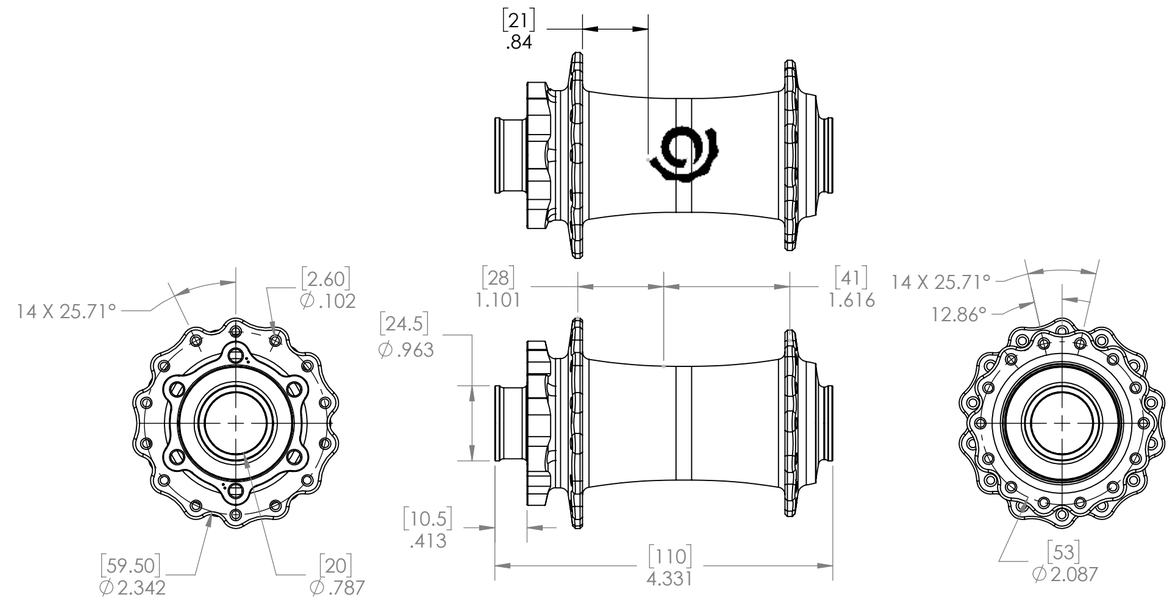

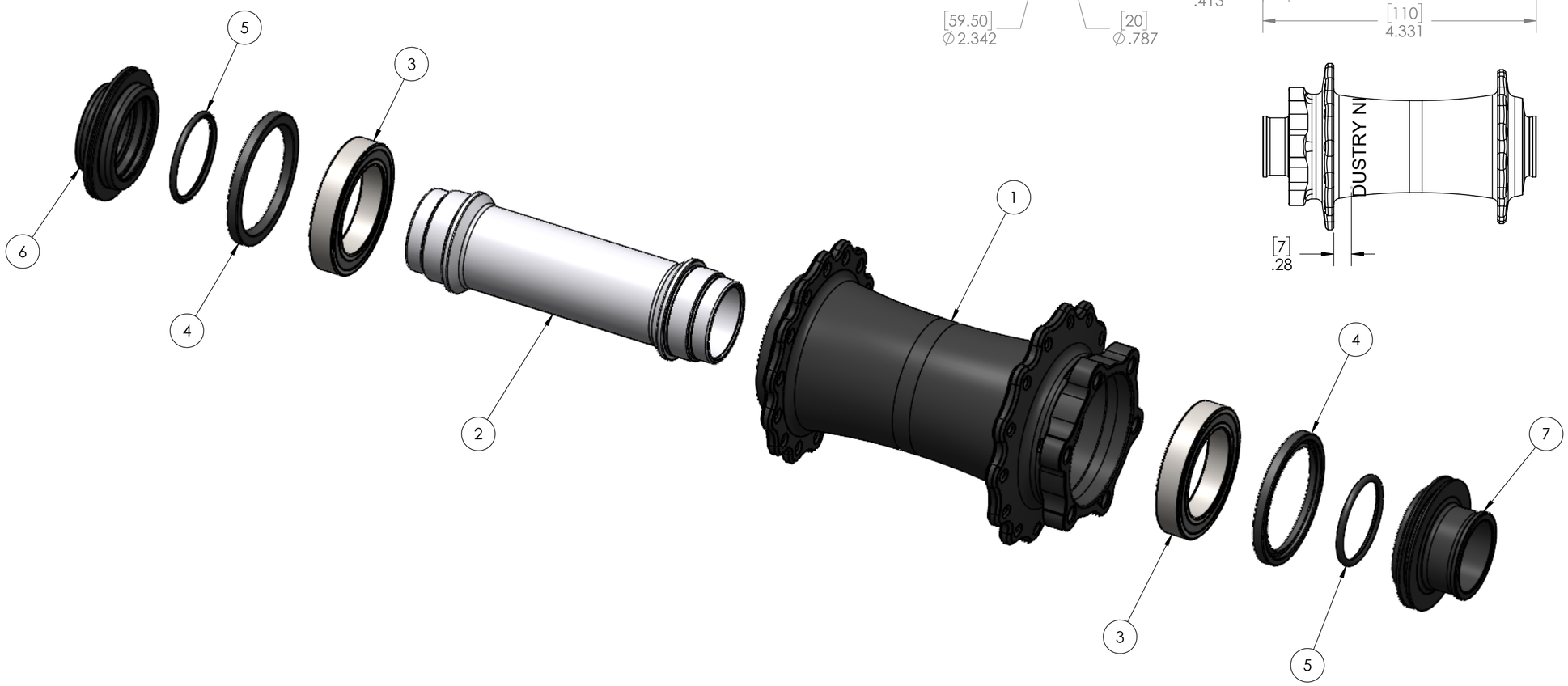

Logo Finish:
White Laser Etched

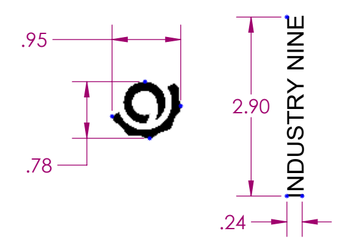

ITEM NO.	PART NUMBER	DESCRIPTION	QTY.
1	MHU4241	Hydra 2 20x110 Boost 28h Classic	1
2	MAX4609	Hydra 2 Axle FR 20x110 Boost	1
3	BB61805	Ball Bearing 25 x 37 x 7	2
4	MAX4643	37mm Radial Lip End Cap Seal	2
5	9452K74	Oil-Resistant Buna-N O-Ring	2
6	MAX4653	Hydra 2 End Cap FR DS 20x110 Boost	1
7	MAX4654	Hydra 2 End Cap FR NDS 20x110 Boost	1

PROPRIETARY AND CONFIDENTIAL

THE INFORMATION CONTAINED IN THIS DRAWING IS THE SOLE PROPERTY OF INDUSTRY NINE COMPONENTRY. ANY REPRODUCTION IN PART OR AS A WHOLE WITHOUT THE WRITTEN PERMISSION OF INDUSTRY NINE COMPONENTRY IS PROHIBITED.

NEXT ASSY	USED ON
APPLICATION	

UNLESS OTHERWISE SPECIFIED:

DIMENSIONS ARE IN INCHES
TOLERANCES:
FRACTIONAL ±
ANGULAR: MACH ± BEND ±
TWO PLACE DECIMAL ±
THREE PLACE DECIMAL ±

INTERPRET GEOMETRIC TOLERANCING PER:

MATERIAL

FINISH

DO NOT SCALE DRAWING

	NAME	DATE
DRAWN		
CHECKED		
ENG APPR.		
MFG APPR.		
Q.A.		

COMMENTS:

INDUSTRY NINE

TITLE:
Hydra 2 Mountain Front Hub
28h 20x110 Boost 6 Bolt

SIZE C | DWG. NO. H3MBBXRXX | REV

SCALE: 1:2 | WEIGHT: | SHEET 1 OF 1